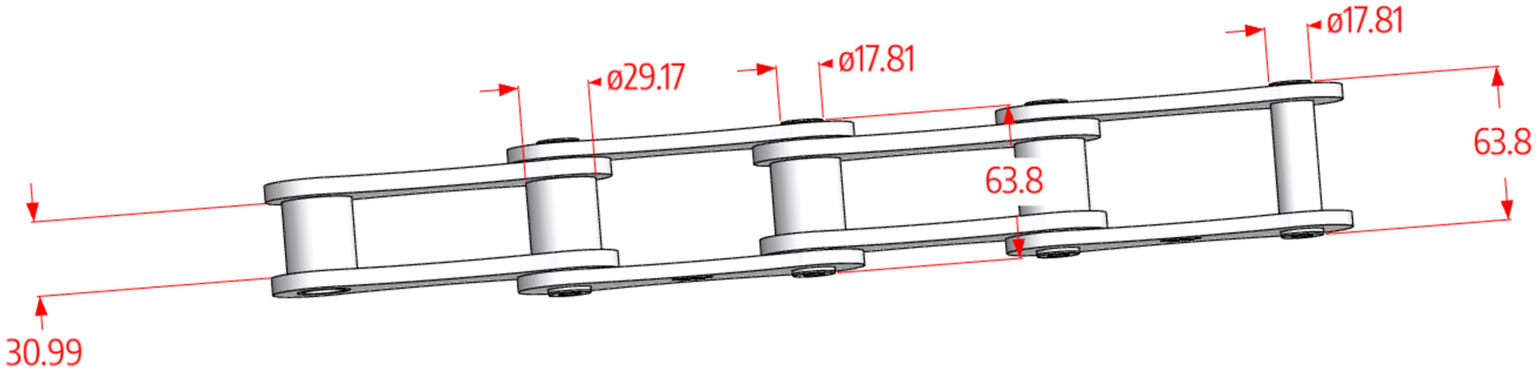
ø17.81
ø29.17
ø17.81
63.8
63.8
30.99

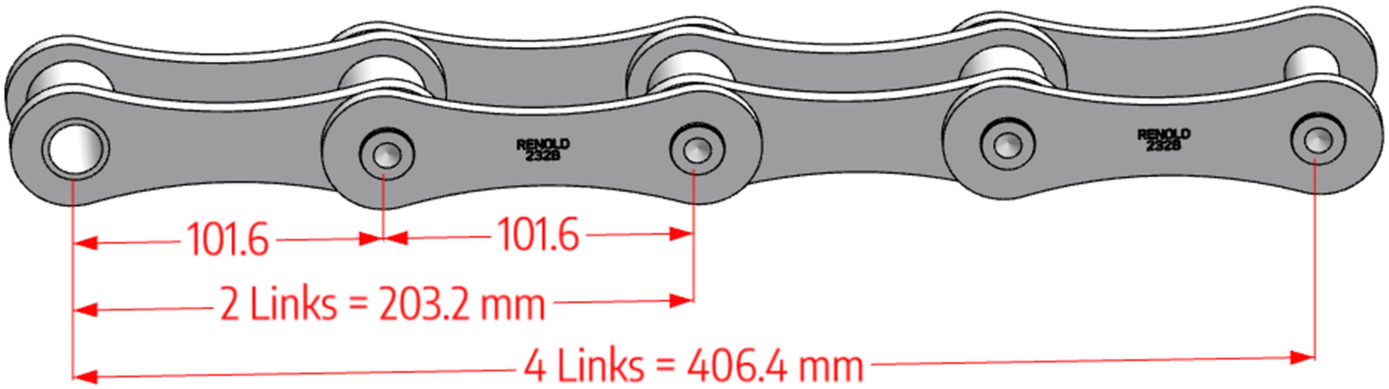
RENOLD
2328
RENOLD
2328
101.6
101.6
2 Links = 203.2 mm
4 Links = 406.4 mm